Reg No.:_____ Name:_____

APJ ABDUL KALAM TECHNOLOGICAL UNIVERSITY

SIXTH SEMESTER B.TECH DEGREE EXAMINATION, APRIL 2018

Course Code: EE304

Course Name: ADVANCED CONTROL THEORY (EE)

Max. Marks: 100 Duration: 3 Hours

PART A

Answer all questions, each carries 5 marks. Marks

1 What is a lag compensator? Draw its pole-zero plot and the frequency response characteristics. (5)

2 Explain the effects of adding PID controller to a system. (5)

3 Selecting $i_1(t) = x_1(t)$ and $i_2(t) = x_2(t)$ as sate variables obtain state equation and output equation of the network shown in Fig.1 (5)

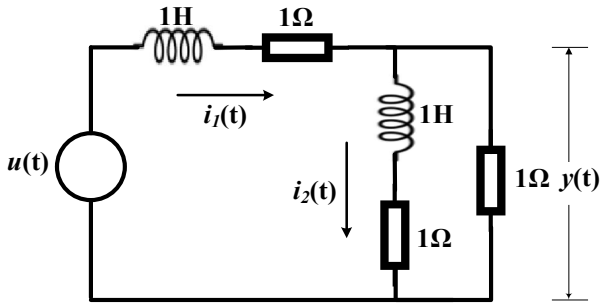

Fig.1

4 The characteristic polynomial of certain sampled data system is given by $P(z) = z^4 - 1.2z^3 + 0.07z^2 + 0.3z - 0.08 = 0$, test the stability of the system using Jury's stability test. (5)

5 Explain different non linearities with diagram. (5)

6 What is limit cycle? How will you determine stable and unstable limit cycle using phase portrait? (5)

7 What are singular point? Explain the types of singular point. (5)

8 Determine given quadratic form is positive definite or not (5)

$$V(x) = 10x_1^2 + 4x_2^2 + x_3^2 + 2x_1x_2 - 2x_2x_3 - 4x_1x_3$$

PART B

Answer any two full questions, each carries10 marks.

9 a) For a feedback system shown in Fig. 2, design suitable compensator so that phase margin is 40° and steady state error for ramp input ≤ 0.2 (10)

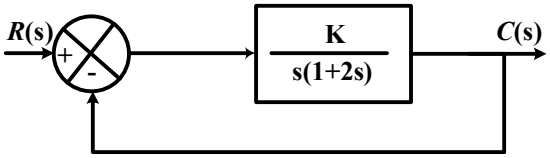

Fig. 2

10 Design a suitable compensator for the system with open-loop transfer function $G(s)H(s)=\dfrac{1}{s(s+1)(s+2)}$ so that the over shoot to a unit step input to be limited to 20% and the transient to be settled with in 3s. (10)

11 a) Briefly explain Ziegler – Nichol's PID tuning rules. (6)

b) Write the design steps of lead compensator based on frequency domain approach. (4)

PART C

Answer any two full questions, each carries 10 marks.

12 Find the complete response of the system (10)

$$\dot{x}=\begin{bmatrix}0 & 1\\ -2 & -3\end{bmatrix}x+\begin{bmatrix}2 & 1\\ 0 & 1\end{bmatrix}U(t), x(0)=\begin{bmatrix}0\\ 0\end{bmatrix}$$

and $y(t)=\begin{bmatrix}1 & 0\\ 1 & 1\end{bmatrix}x$ to the following input, $U(t)=\begin{bmatrix}u(t)\\ e^{3t}u(t)\end{bmatrix}$ where *u(t)* is the unit step input.

13 a) Transform the system in to controllable canonical form (7)

$$\dot{x}=\begin{bmatrix}-1 & 1\\ 0 & 2\end{bmatrix}x+\begin{bmatrix}2\\ 1\end{bmatrix}u \text{ and } y=\begin{bmatrix}1 & 2\end{bmatrix}x$$

b) State and explain sampling theorem (3)

14 a) Consider a system defined by (7)

$$\dot{x}=\begin{bmatrix}0 & 1\\ -3 & 1\end{bmatrix}x+\begin{bmatrix}0\\ 2\end{bmatrix}u \text{ and } y=\begin{bmatrix}1 & 0\end{bmatrix}x$$

Using state feedback control $u=-Kx$, it is desired to have the closed loop poles at s = −3 and , s =−4, determine the state feedback gain matrix *K*.

b) What is pulse transfer function? (3)

PART D

Answer any two full questions, each carries 10 marks.

15 Obtain the describing function of saturation non-linearity (10)

16 A common form of an electronic oscillator is represented as shown in Fig. 3. For what value of *K,* the possibility of limit cycle predicted? If *K*=3, determine amplitude and frequency of limit cycle. Also find the maximum value of *K* for the (10)

system is stable.

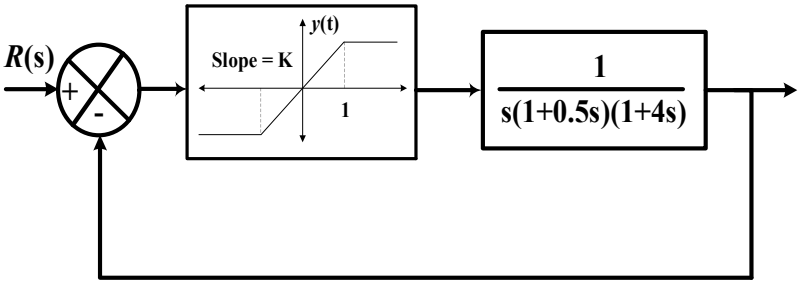

Fig. 3

17 A second order system is represented by $\dot{x} = Ax$ where (10)

$$A = \begin{bmatrix} 0 & 1 \\ -1 & -1 \end{bmatrix}$$

Assuming matrix Q to be identity matrix, solve for matrix P in the equation $A^T P + PA = -Q$. Use Lyapunov theorem and determine the stability of the system. Write the Lyapunov function $V(x)$

****