Reg No.:_____ Name:_____

APJ ABDUL KALAM TECHNOLOGICAL UNIVERSITY

THIRD SEMESTER B.TECH DEGREE EXAMINATION, APRIL 2018

Course Code: CH205

Course Name: FLUID AND PARTICLE MECHANICS-I (CH)

Max. Marks: 100 Duration: 3 Hours

PART A

Answer any two full questions, each carries 15 marks Marks

1 a) Within a stream of flowing honey, at a certain point, the velocity gradient is $0.25\ s^{-1}$. If the fluid density is $1.4198 g/cm^3$ and kinematic viscosity is $9927.9 mm^2/s$, calculate the shear stress at that point. (5)

b) Explain the working of a coaxial cylinder viscometer. Derive its working equation and list the assumptions involved in it? (8)

c) State Continuum hypothesis. (2)

2 a) An internal shaft of 50 cm length rotates concentrically inside a cylinder, with a clearance of 1 mm from the wall. The shaft rotates at 2000 rpm and has a diameter of 50 mm. A lubricant filled in the gap has a dynamic viscosity of 0.01 Pa.s. Considering the lubricant to be Newtonian and having linear velocity gradient, calculate the frictional torque the shaft has to overcome. (8)

b) Explain buoyancy and state its unit? How can you explain the stability criterion for a floating object such as a ship in water? (7)

3 a) How does temperature vary with height in atmosphere? How can you theoretically estimate this variation? (6)

b) A single column inclined manometer with a reservoir as shown in the image is connected to a pipe containing oil of specific gravity 1.2. The area of the reservoir is 200 times the area of the manometric tube. The reservoir contains mercury. Calculate the pressure in the pipe and list the practical advantages of having: (9)

i) Reservoir and ii) Inclined tube?

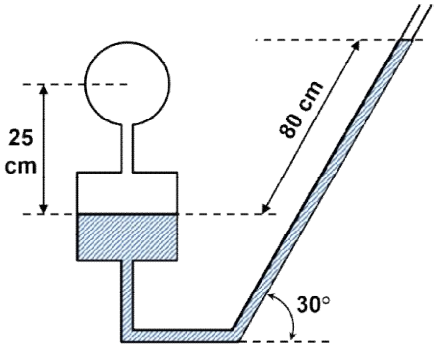

PART B

Answer any two full questions, each carries 15 marks

4 a) Explain Reynolds experiment with suitable diagram. Give its significance? (5)

b) Define the following terms: Streak line, stream line, path line, stream tube, steady flow. (5)

c) The velocity components in a two-dimensional flow field for an incompressible (5)

fluid are expressed as $u = \frac{y^3}{3} + 2x - x^2y$ *and* $v = xy^2 - 2y - \frac{x^3}{3}$. Show that these functions represent a possible case of irrotational flow.

5 a) What are eddies? What can be said about the flow patterns associated with eddies? Explain the nature of energy transfer happening in eddies. Under what conditions can eddies be considered to be useful? (8)

b) Prior to distillation, crude oil of specific gravity 0.7 is sent to three heat exchangers through a piping as shown in figure. The diameters of the pipes A, B, & C are 4 in., 6 in., and 1.5 in. respectively. If equal quantity of liquid flows through each of the pipes C, find the (i) mass flow rates and (ii) average linear velocities in each pipe sections. Flow through A is 10 m^3/h. (7)

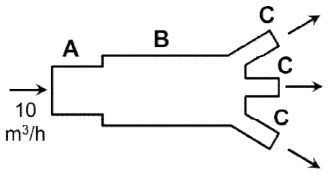

6 a) Explain the concept of macroscopic momentum balance. (3)

b) Derive Bernoulli equation with correction for pump work, fluid friction, and variation in cross-sectional velocity. What are the unique features of friction term in the equation? (10)

c) Write down the general form of continuity equation for compressible flow. (2)

PART C

Answer any two full questions, each carries 20 marks

7 a) Determine the radius at which the point velocity in a fully developed steady flow of an incompressible Newtonian fluid through a pipe is equal to the average velocity. (6)

b) A fluid of dynamic viscosity 25 cP and specific gravity of 0.95 flows through a pipe of 3 cm diameter and 125 m long. The average flow velocity is 1 m/s. What would be the pressure drop for this flow? (6)

c) Explain the principle of pitot tube used for flow measurement. What are its advantages and disadvantages? (8)

8 a) How does surface roughness affectsskin friction? How can you incorporate this into calculation of friction factor? (6)

b) Water flows through a horizontal pipe of 20 cm diameter which expands suddenly to a 30 cm diameter pipe. If the flow rate is 0.5 m^3/s, find the head loss due to sudden enlargement. (6)

c) What are the various valves used for flow control? Sketch suitable figures for any four valves. (8)

9 a) Highlight the application of the following in fluid flow: Deviating velocities in turbulent flow, Blasius correlation, Moody chart, Hagen-Poiseuille equation. (8)

b) A trapezoidal notch is 1 m wide at the top and 0.7 m at the bottom, with a height of 0.3 m. The head of water on the notch is at 0.25 m. Assuming a discharge coefficient of 0.65, estimate the flow rate through the notch. State the advantages of a trapezoidal notch. (12)

****