Reg. No.:_____ Name:_____

APJ ABDUL KALAM TECHNOLOGICAL UNIVERSITY

SIXTH SEMESTER B.TECH DEGREE EXAMINATION, APRIL 2018

Course Code: CH 302

Course Name: PROCESS DYNAMICS AND CONTROL (CH)

Max. Marks: 100 Duration: 3 Hours

PART A

Answer any two full questions, each carries 15 marks. Marks

1 a) A thermometer having a time constant of 0.2 min. is placed in a temperature bath and after the thermometer comes in equilibrium with the bath, the temperature of the bath is increased linearly with time at a rate of 1 deg.C/min. What is the difference between the indicated temperature and bath temperature 0.1 min. after the change in temperature begins? (7)

b) Develop the mathematical model for a liquid level system, given that the outlet flow is proportional to 'h' where 'h' is the liquid level in the tank. Obtain the transfer function that relates head and flow. Write the assumptions required for the development of the model and the transfer function. (8)

2 a) Invert the following Laplace transform and plot the function obtained. (7)

$$f(s) = \frac{1}{s} + \frac{e^{-s} - e^{-2s}}{s^2} - \frac{e^{-3s}}{s}$$

b) The transfer function of a process is given by

$$\frac{Y(s)}{X(s)} = \frac{10}{s^2 + 1.6s + 4}$$

A step of magnitude 4 is introduced to this system. Comment on the nature of the response and determine (8)

(i) Percentage overshoot,

(ii) Maximum value of Y(t),

(iii) Ultimate value of Y(t) and

(iv) Period of oscillation.

3 a) The transfer function of a process is given by

$$\frac{Y(s)}{X(s)} = \frac{s + 1}{s^2 + 2s + 25}$$

A step of magnitude 25 is introduced to this system. Comment on the nature and stability of the response and determine: (15)

(i) *Y(0)* and *Y(∞)*,

(ii) Percentage overshoot,

(iii)Period of oscillation and

(iv)Decay Ratio.

PART B

Answer any two full questions, each carries 15 marks.

4 a) For the closed loop block diagram given below, determine (i) C/R and C/U (ii) offset for servo problem by giving a unit step change in set point. (10)

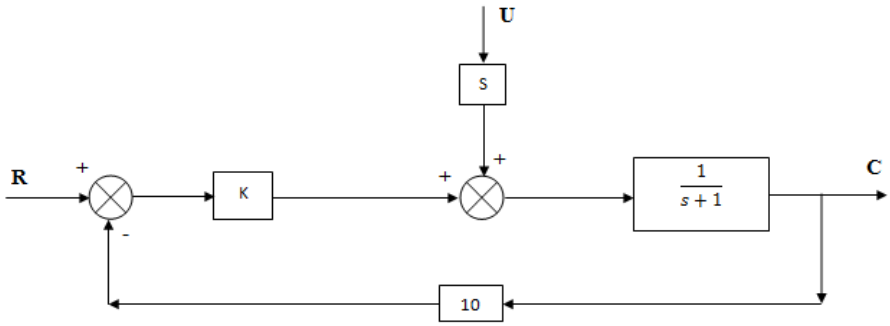

b) A first order process $G(s) = \frac{5}{4s+1}$ is controlled using a proportional controller of gain 2. Determine the magnitude of offset for a unit step change in set point. (5)

5 a) Using Routh stability criterion, determine the stability of a control system if the characteristic equation is (7)

$$s^4 + 8s^3 + 18s^2 + 16s + 5 = 0$$

b) By block diagram reduction process, obtain an expression for C/R for the loop shown in figure below. (8)

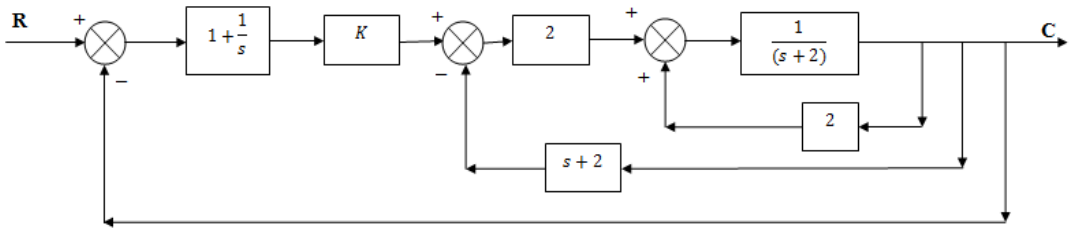

6 a) For the closed loop system shown in the figure below, (15)

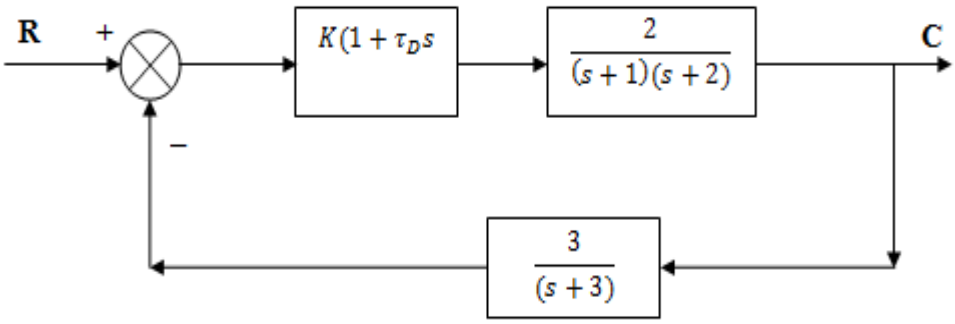

i) Obtain the transfer function and develop the characteristic equation.

ii) Determine the stability of the loop for τ_D =0.1

iii) Specify the critical stability condition?

PART C

Answer any two full questions, each carries20 marks.

7 a) Obtain the Bode plot for the open loop transfer function given below, (15)

$$G(s) = \frac{K}{(s+1)^3}$$

b) Using substitution rule, determine the amplitude ratio and phase angle of two first order systems connected in series. (3)

c) State Bode Stability Criterion (2)

8 a) Using Zeigler – Nichols method, design a suitable PID controller for the process with transfer function, (15)

$$G(s) = \frac{(3s+1)e^{-0.1s}}{(10s+1)(2s+1)}$$

b) List and explain the important features of SCADA from a control point of view? (5)

9 a) A chemical process is modelled as three linear first order systems in series with time constants 1, 2, and 3 minutes. The overall process gain is unity. Using Zeigler – Nichols controller tuning rules, determine the parameter settings for a PID controller. (10)

b) Obtain the Bode plot for the open loop transfer function,

$$G(s) = \frac{(0.5\,s+1)e^{-0.1s}}{s(5s+1)}$$ (10)

****